Parts List				
ITEM	QTY	PART No.	DESCRIPTION	MATERIAL
1	1	BB8389	Body for Ø89 DP Rec 10k 2x 1" WN Sch80 8 Holes to Interface	S32760 SUPER DUPLEX
2	1	BB8202	Ø89 Rec J-Lock Interface Version 8 Holes to Interface	S32760 SUPER DUPLEX
3	8	101379	Ø13 Washer Nord-Lock 254SMO	UNS S31254 6MO
4	8	100403	M12x40 Socket Head Bolt DIN 912 A4-80	A4

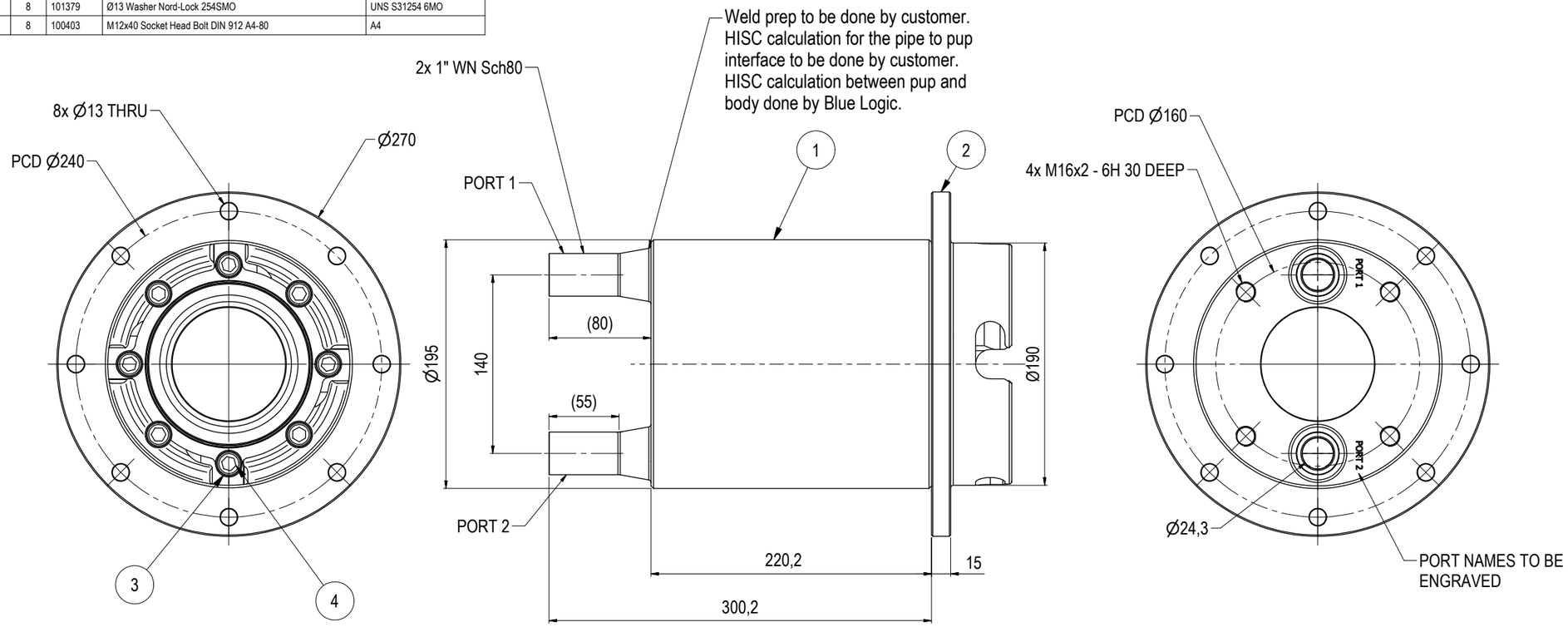

NOTE: 1
DESIGN CODE:
API 17H Type 3

NOTE: 2
TECHNICAL CLASSIFICATION:

Article Type:	001-Hot Stabs
Main Group:	1.10. Ø89 Hot Stab
Intermediate Group:	1.89.02. Receptacle
Sub Group:	1.89.423.02. Dual

NOTE: 3
INTERFACE INFORMATION:

Pressure Rating Bar:	690
Design Water Depth:	N/A
Material:	Long-term
Weight in Air:	48,5 kg
Volume:	6,18 dm^3
Submerged Weight:	42,16 kg
Surface Area:	5128 cm^2
Hydraulic:	1" WN Sch 80
Mechanical:	N/A
Electrical:	N/A
Com. & Protocol:	N/A

NOTE 4
NON SPECIFIED TOLERANCES TO BE IN ACCORDANCE WITH NS-ISO 2768-1M

0,5-3mm	± 0,1
3-6mm	± 0,1
6-30mm	± 0,2
30-120mm	± 0,3
120-400mm	± 0,5
400-1000mm	± 0,8
1000-2000mm	± 1,2
2000-4000mm	± 2,0

NOTE 5
RECEPTACLE TO BE CONNECTED TO CP SYSTEM

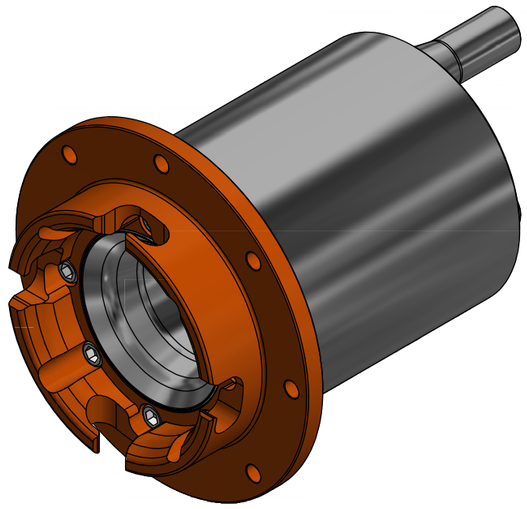

NOTE: 6
ADDITIONAL INFORMATION:
Ø89 Dual Port Receptacle designed according to API 17H Type 3 in Super Duplex (S32760) material suitable for permanent installation. The Receptacle is pressure rated to 690 Bar / 10 000 Psi. Integrated J-lock to lock the Stab in position.

NOTE: 7
OPERATION & MAINTENANCE INFORMATION:
600189-TD-0002

Rev.	Date	Reason for issue	Revision change	Made	Chk'd	Appr.
03	4.6.2024	7-IFC (Issued for Construction)		HNJ	PIA	HNJ
02	23.9.2022	7-IFC (Issued for Construction)		HNJ	TAN	HNJ
01	27.6.2022	2-IFT (Issued for Tender)		HNJ	NA	NA

BLUE LOGIC

This Drawing is the Property of Blue Logic AS © and must Not be Loaned, Reproduced or Transferred to others without written Permission

Dwg Scale: NTS
Dwg Proj:
Dwg Format: A3

Drawing title: Ø89 DP Rec 10k Long-term wJ-L 1" WN Sch 80 8 Holes Interf

Drawing number: BB8388

Rev. 03